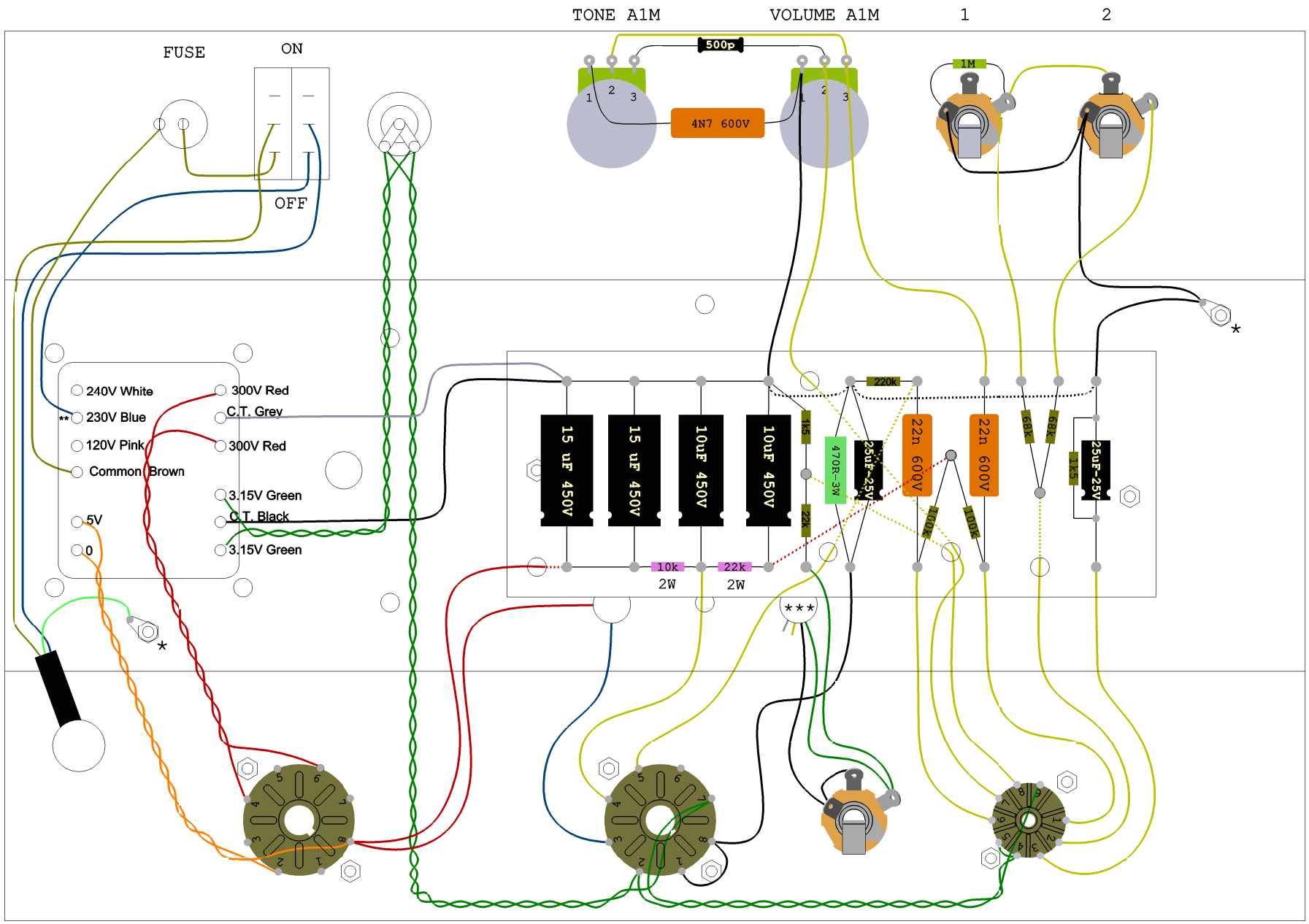

* Drill 4mm holes

** Chose the main voltage of your country:
Pink for 120V, Blue for 230V, White for 240V
Insulate unused wires. Wiring for 230V is shown

*** 0 Black, 4Ω Yellow, 8Ω Green, 16Ω Grey
Insulate unused wires

ROSAMP		
TITLE:	5F2A Layout	
DATE: 09/22	REV: 1.0	SHEET: 1/1