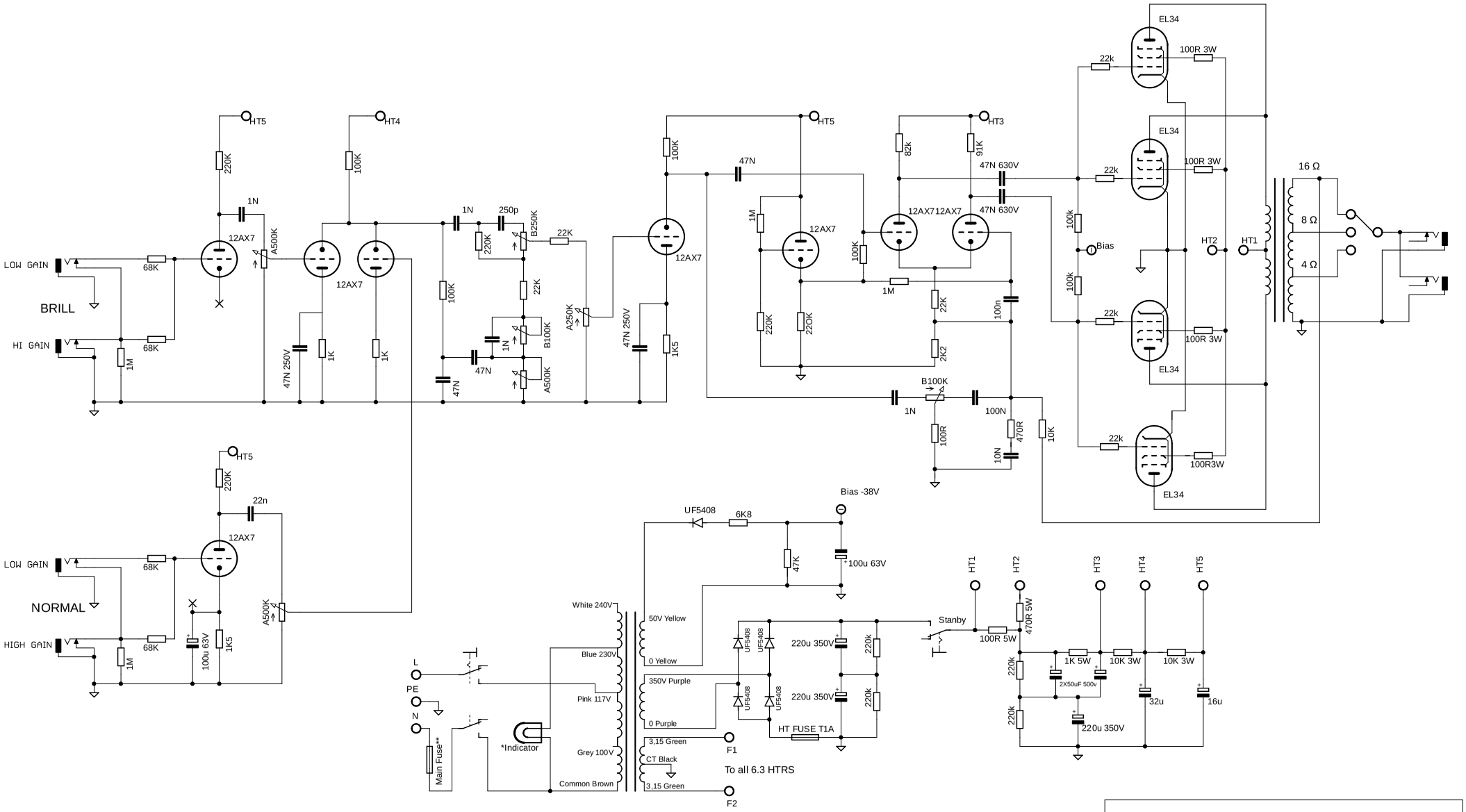

*ALWAYS CONNECT PILOT LIGHT TO THE 230V TAP
WIRING FOR 117/120v IS SHOWN
** T4A for 100/117V, T2A for 230/240V

ROSAMP amplification	
TITLE: DR103 Schematic	
Document Number:	REV: 1.0
Date: 05/06/2023 20:15	Sheet: 1/1